A

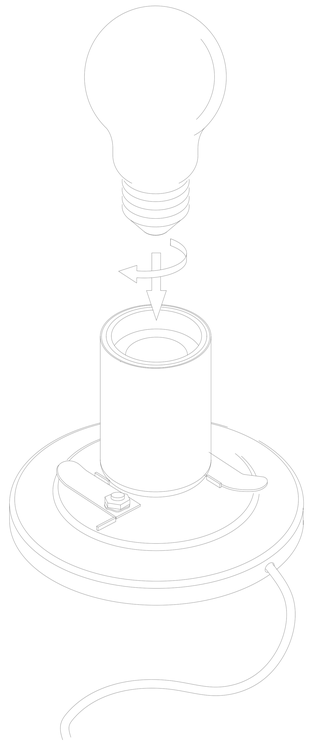

B

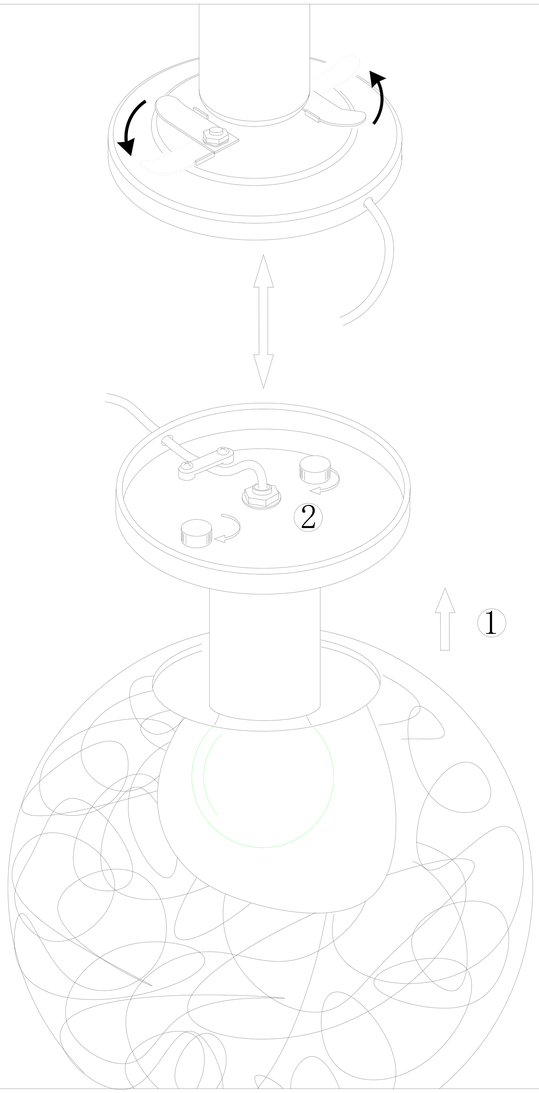

C

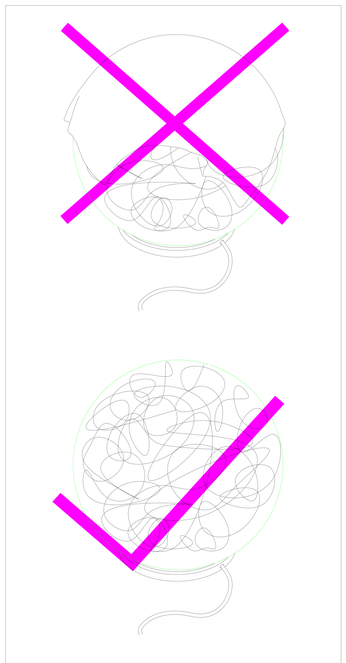

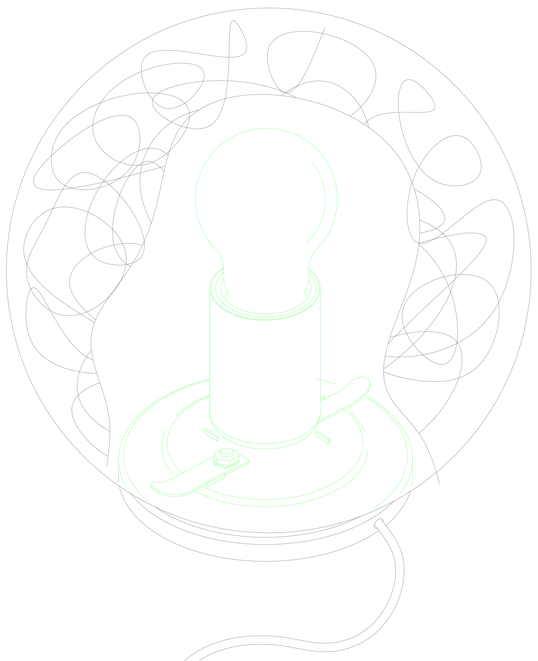

BLA93075